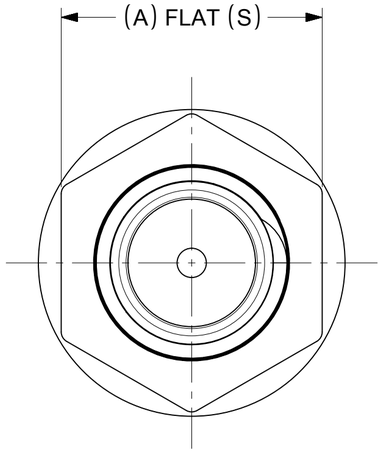

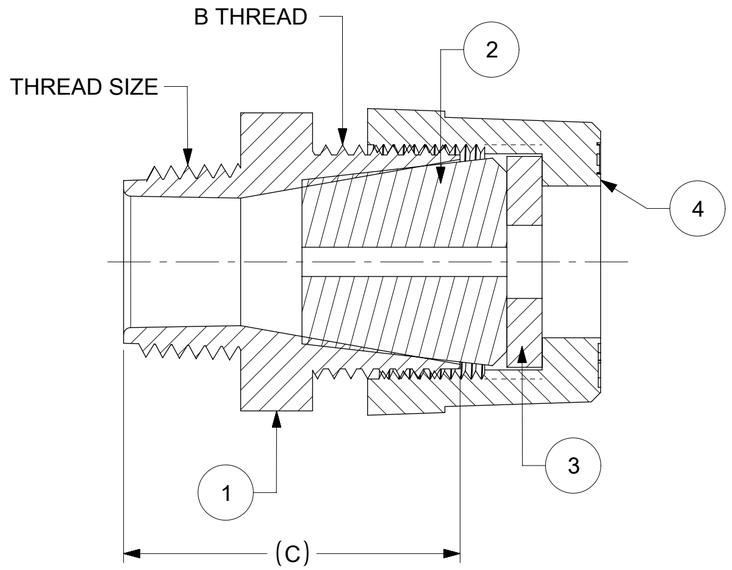

SECTION A-A

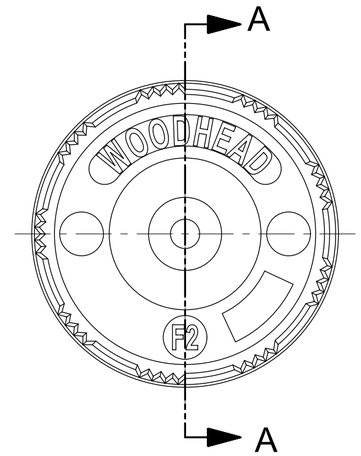

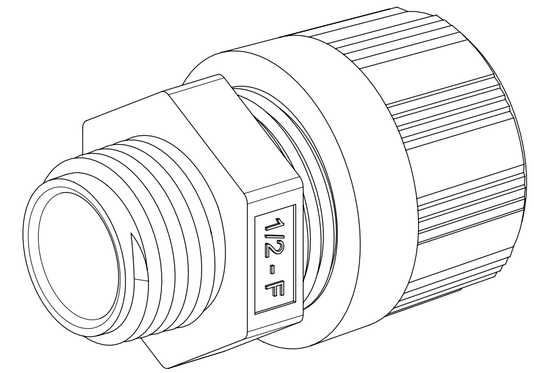

MATERIAL NO.	OLD PART NO.	THREAD SIZE	CABLE DIA. RANGE	A	B	C	ITEM 1 COLOR	ITEM 2 MATERIAL	ITEM 2 COLOR	ITEM 3 MATERIAL	ITEM 4 MATERIAL	ITEM 4 COLOR
1300980036	5518		.062-.125 / 1.57-3.18						BLACK			
1300980041	5520		.125-.187 / 3.18-4.75						YELLOW			
1300980046	5522		.187-.250 / 4.75-6.35						ORANGE			
1300980052	5524		.250-.312 / 6.35-7.92						BLACK			
1300980061	5526	1/2" NPT	.312-.375 / 7.92-9.53	1.13 / 28.7	1" - 14	1.44 / 36.6	GRAY	NITRILE	GRAY	HDPE	NYLON	GRAY
1300980069	5528		.375-.437 / 9.53-11.10						GREEN			
1300980076	5530		.437-.500 / 11.10-12.70						ORANGE			
1300980082	5532		.500-.562 / 12.70-14.27						BLACK			
1300970327	5534		.562-.625 / 14.27-15.87						GRAY			

NOTES:
1. MATERIAL: SEE TABLE
2. FINISHES: SEE TABLE
3. NEMA RATING: NEMA 3R
4. RoHS COMPLIANT: YES

OLD DOCUMENT NO. SD-130098-003

ITEM	DESCRIPTION	MATERIAL	FINISH	QTY.
1	STRAIGHT MALE BODY	NYLON	SEE TABLE	1
2	GROMMET	SEE TABLE	SEE TABLE	1
3	COMPRESSION RING	SEE TABLE	NATURAL (WHITE)	1
4	COMPRESSION NUT	SEE TABLE	SEE TABLE	1

DOCUMENT STATUS	P1	RELEASE DATE	2020/05/22 15:08:54

SYMBOLS: = 0 / = 0 / = 0 / = 0 / = 0 / = 0 / = 0 / = 0

THIS DRAWING CONTAINS INFORMATION THAT IS PROPRIETARY TO MOLEX ELECTRONIC TECHNOLOGIES, LLC AND SHOULD NOT BE USED WITHOUT WRITTEN PERMISSION

DIMENSION UNITS: INCH/MM
SCALE: NTS

GENERAL TOLERANCES (UNLESS SPECIFIED)

	MM	INCH
4 PLACES	±	±
3 PLACES	±	±
2 PLACES	±	± 0.01
1 PLACE	± 0.3	±
0 PLACES	±	±
ANGULAR TOL	± 0.5 °	

DRAFT WHERE APPLICABLE MUST REMAIN WITHIN DIMENSIONS

CURRENT REV DESC: MIGRATION TO ECTR/NX

EC NO: 630126
DRWN: PPURSUTANDEL 2019/11/28
CHK'D: ALEON01 2020/05/21
APPR: HKNEELAND 2020/05/22

INITIAL REVISION:
DRWN: PPURSUTANDEL 2019/11/28
APPR: HKNEELAND 2020/05/22

THIRD ANGLE PROJECTION

DRAWING	SERIES
C-SIZE	130098

molex

MAX-LOC F2 1/2 (.062-.125)

PRODUCT CUSTOMER DRAWING

DOCUMENT NUMBER	DOC TYPE	DOC PART	REVISION
1300980036	PSD	000	A

MATERIAL NUMBER	CUSTOMER	SHEET NUMBER
SEE TABLE	GENERAL MARKET	1 OF 1

FORMAT: Eng-lega-master-tb-prod-C
REVISION: D
DATE: 2018/01/18