| ORDER NO. | WOODHEAD NO. | COLOR |
|---|---|---|
| 130147-0059 | 27W76 | YELLOW |
| 130147-0060 | 27W76BLK | BLACK |
| 130147-0465 | 27W76-ICE | BLUE |

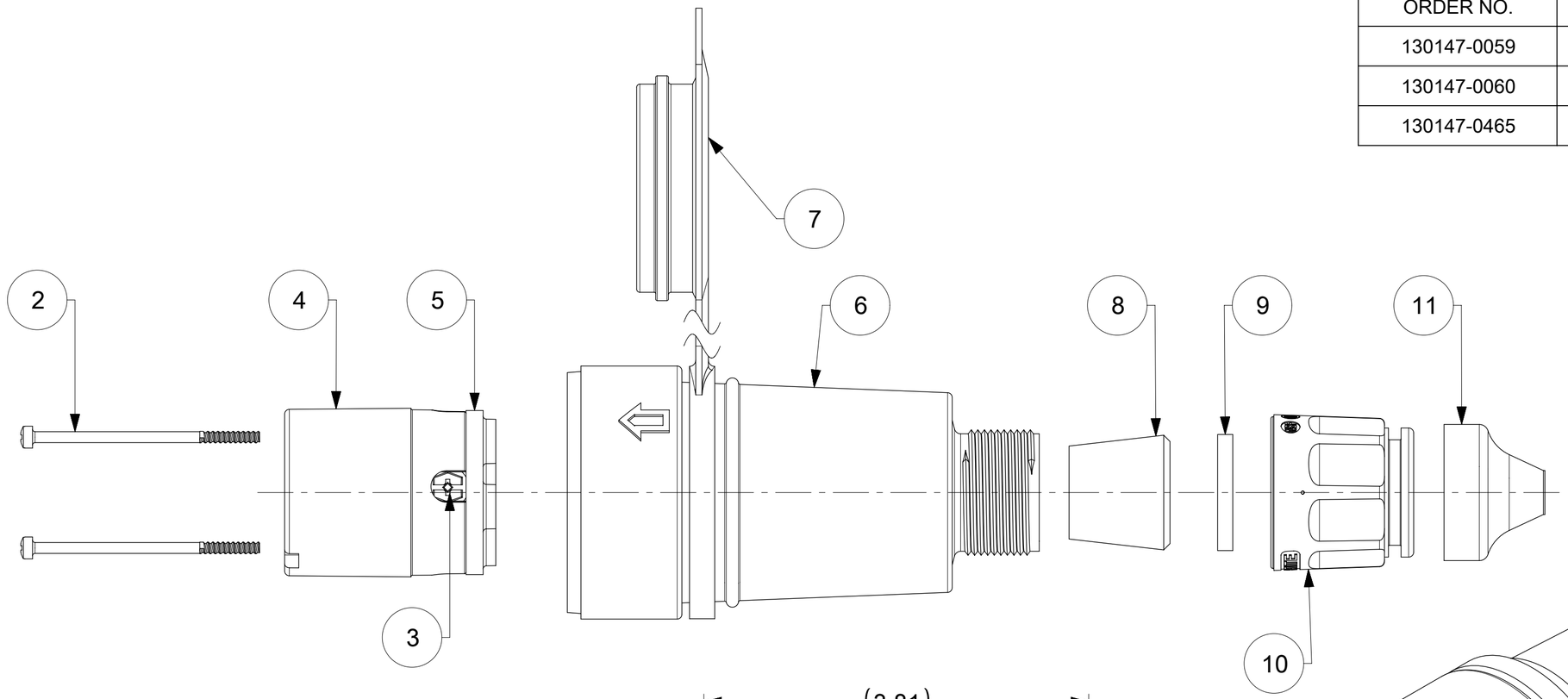


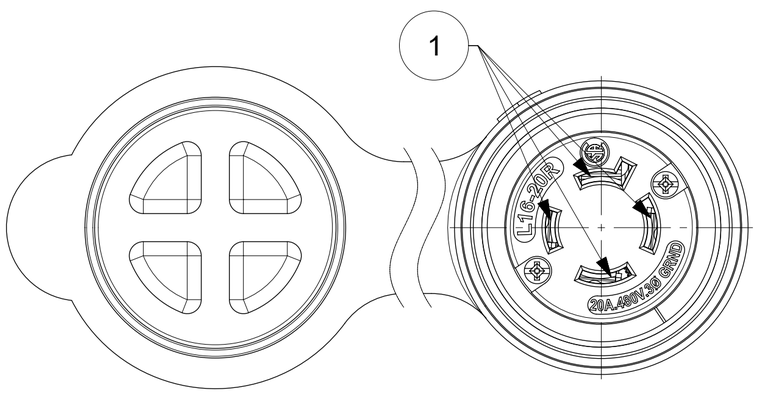


FACE VIEW

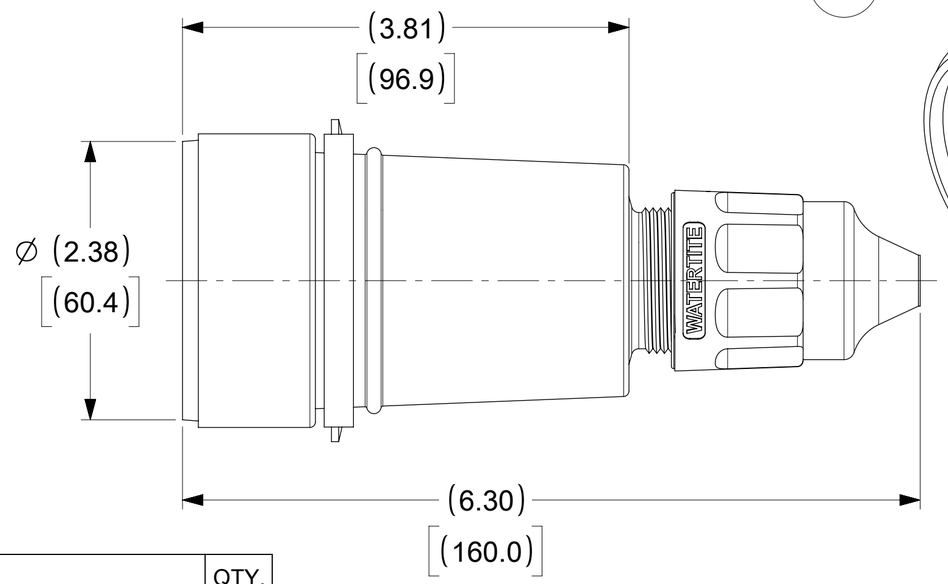


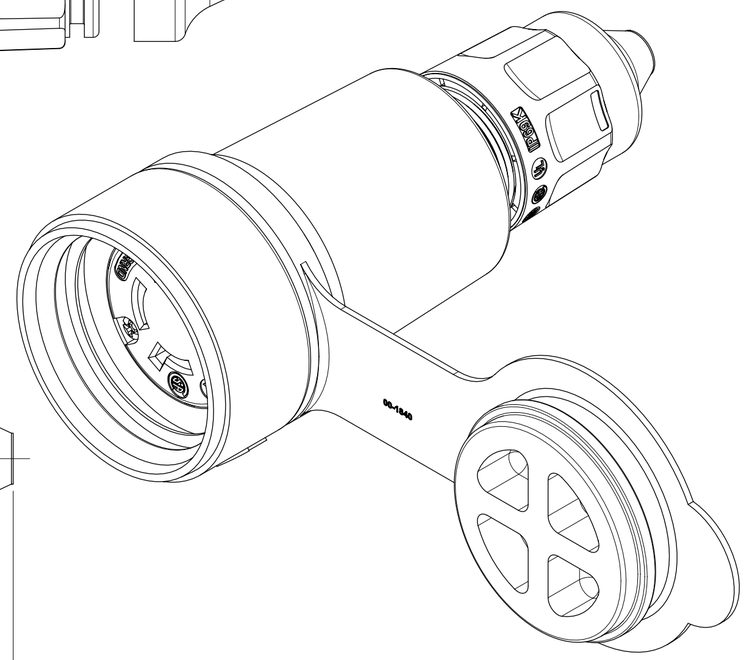

| ITEM NO. | DESCRIPTIONS | MATERIAL | QTY. |
|---|---|---|---|
| 1 | BLADE | BRASS, NICKEL PLATED | 4 |
| 2 | RETAINING SCREWS | STAINLESS STEEL | 2 |
| 3 | CLAMP AND TERMINAL SCREW ASSY | BRASS, ZINC PLATED | 4 |
| 4 | INSERT | NYLON | 1 |
| 5 | TERMINAL COVER | POLYCARBONATE | 1 |
| 6 | HOUSING | SILICONE WITH NYLON THREAD | 1 |
| 7 | COVER CLOSURE | SILICONE | 1 |
| 8 | GROMMET | RUBBER | 4 |
| 9 | FRICTION RING | NYLON | 1 |
| 10 | COMPRESSION NUT | NYLON | 1 |
| 11 | CABLE GLOVE | SILICONE | 1 |

NOTE:
1. ACCEPT CABLE RANGE FROM .437" TO .750"

THIS DRAWING CONTAINS INFORMATION THAT IS PROPRIETARY TO MOLEX ELECTRONIC TECHNOLOGIES, LLC AND SHOULD NOT BE USED WITHOUT WRITTEN PERMISSION

FUNCTIONAL SYMBOLS: FA = 0, FC = 0, FP = 0

DIVISIONAL SYMBOLS

DIMENSION UNITS: INCH
SCALE: NTS

GENERAL TOLERANCES (UNLESS SPECIFIED)

| | MM | INCH |
|---|---|---|
| 4 PLACES | ± | ± |
| 3 PLACES | ± | ± |
| 2 PLACES | ± | ± |
| 1 PLACE | ± | ± |
| 0 PLACES | ± | ± |
| ANGULAR TOL | ± ° | |

DRAFT WHERE APPLICABLE MUST REMAIN WITHIN DIMENSIONS

CURRENT REV DESC: ADDED 130147-0465 TO THE TABLE.

EC NO: 695188
DRWN: DNGUYEN62 2022/02/09
CHK'D: WLEUNG 2022/02/15
APPR: JFMURPHY 2022/03/15

INITIAL REVISION:
DRWN: DRAWN BY 0099/99/99
APPR: APPR BY 0099/99/99

THIRD ANGLE PROJECTION | DRAWING: C-SIZE | SERIES: 130147

molex

WATERTITE CONNECTOR 3P4W L16-20

PRODUCT CUSTOMER DRAWING

| DOCUMENT NUMBER | DOC TYPE | DOC PART | REVISION |
|---|---|---|---|
| 1301470059 | PSD | 000 | B |

| MATERIAL NUMBER | CUSTOMER | SHEET NUMBER |
|---|---|---|
| SEE TABLE | GENERAL MARKET | 1 OF 1 |

| DOCUMENT STATUS | P1 | RELEASE DATE | 2022/03/15 02:28:10 |
|---|---|---|---|

FORMAT: Eng-tegs-master-B-prod-C
REVISION: E1
DATE: 2021/05/01