ORDER NO	130091-0090
WOODHEAD ENG. NO	997-3000
WIRE GAUGE	12
CONDUCTORS	3
AMPERAGE	15A
WORKING CORD	35 FT. BLACK
CORD TYPE	SJTOW
CONSTRUCTION	STEEL
PAINT	YELLOW POWDER COAT
REEL ENCLOSURE RATING	INDOOR
RETRACTION WEIGHT	3.0 LB [1.4KG]

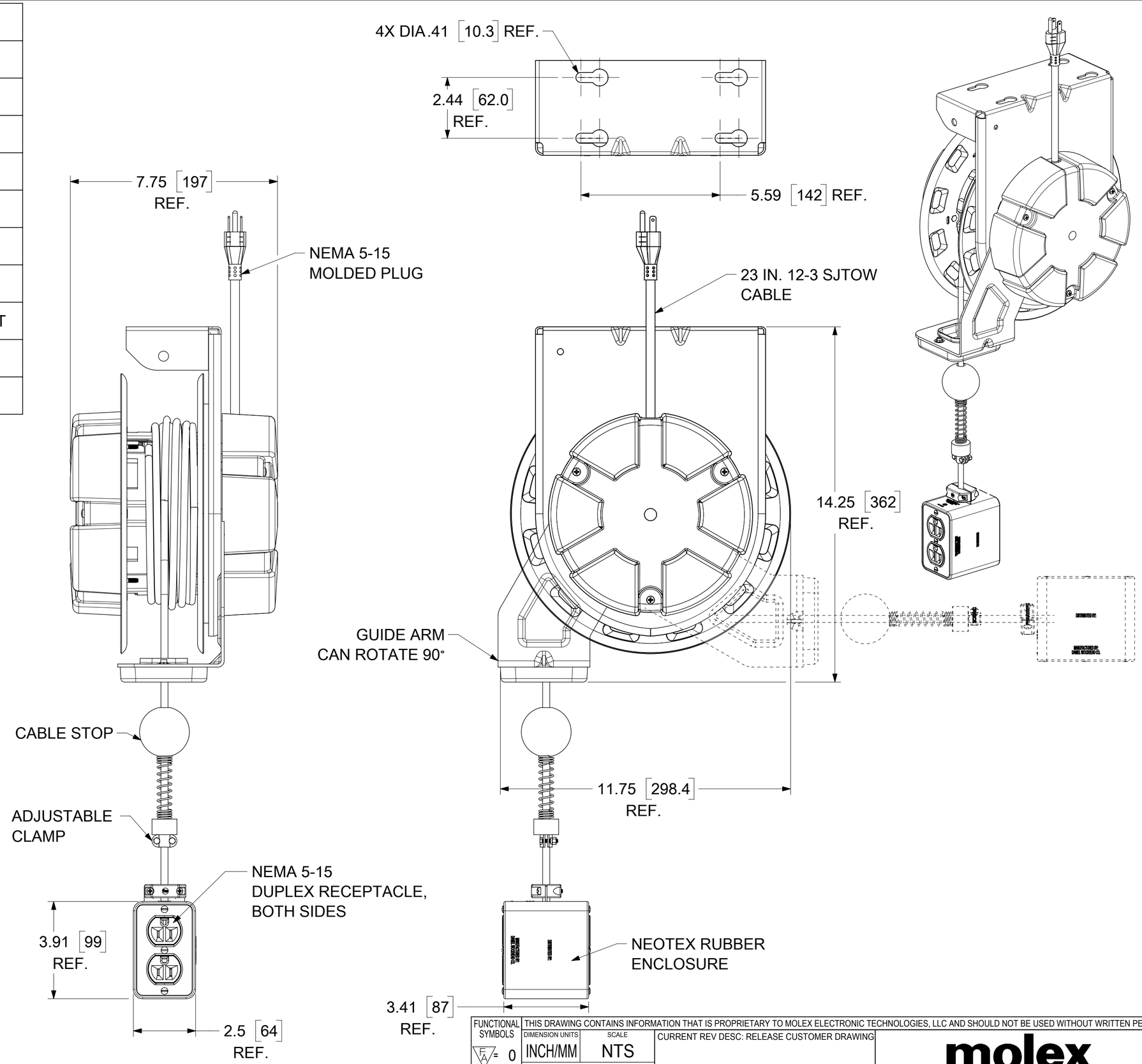

NOTES:

1. CABLE GUIDE IS ADJUSTABLE - DUAL POSITION
2. RATCHET LOCK IS EASY TO DISENGAGE FOR CONSTANT TENSION
3. REEL CANNOT BE "LOCKED OUT" AT FULL TENSION
4. CABLE STOP INCULDED

THIS DRAWING CONTAINS INFORMATION THAT IS PROPRIETARY TO MOLEX ELECTRONIC TECHNOLOGIES, LLC AND SHOULD NOT BE USED WITHOUT WRITTEN PERMISSION

FUNCTIONAL SYMBOLS: FA = 0, FC = 0, FP = 0

DIVISIONAL SYMBOLS

DIMENSION UNITS: INCH/MM — SCALE: NTS

GENERAL TOLERANCES (UNLESS SPECIFIED)

	MM	INCH
4 PLACES	±	±
3 PLACES	±	± 0.005
2 PLACES	± 0.13	± 0.01
1 PLACE	± 0.25	± 0.02
0 PLACES	±	±
ANGULAR TOL	± 0.5 °	

DRAFT WHERE APPLICABLE MUST REMAIN WITHIN DIMENSIONS

CURRENT REV DESC: RELEASE CUSTOMER DRAWING

EC NO: 670504
DRWN: DSOPPIN 2020/06/17
CHK'D: DSOPPIN 2022/05/17
APPR: HKNEELAND 2022/06/09

INITIAL REVISION:
DRWN: MCHOJECK 2011/07/18
APPR: DTITUS 2011/09/02

THIRD ANGLE PROJECTION | DRAWING: C-SIZE | SERIES: 130091

molex

CORD REEL W/3000-1 BOX
35' 12-3 CORD

PRODUCT CUSTOMER DRAWING

DOCUMENT NUMBER	DOC TYPE	DOC PART	REVISION
SD-130091-009	PSD	001	A1

MATERIAL NUMBER	CUSTOMER	SHEET NUMBER
SEE TABLE	GENERAL MARKET	1 OF 1

DOCUMENT STATUS	P1	RELEASE DATE	2022/06/09 16:37:19

FORMAT: IN-master-lb-prod-C REVISION: D DATE: 2020/01/14