M-14317 | 1

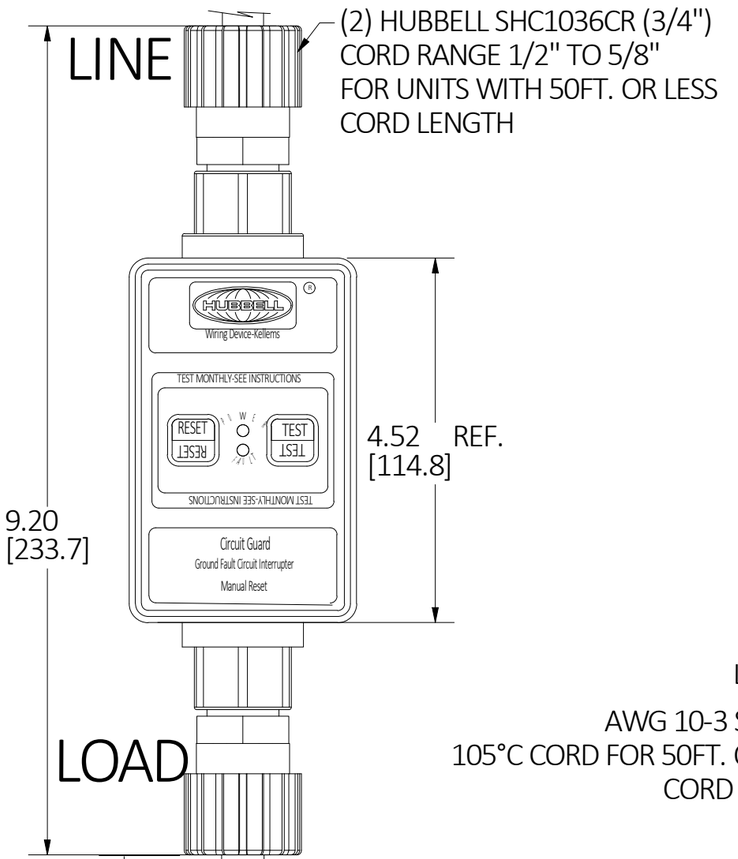


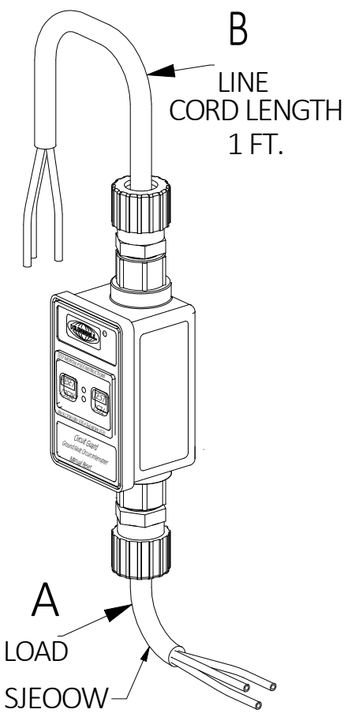


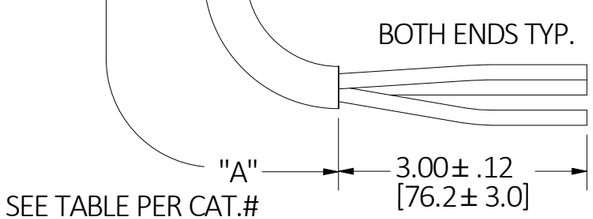


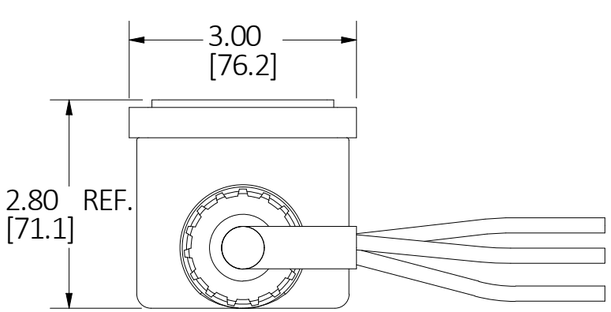


NOTE: ALL DIMENSIONS ARE IN INCHES [mm] EXCEPT CORD LENGTH IN FOOT.

CAGE CODE 74545

| CAT.# | RATING | WATTS | POWER-UP TYPE | LOAD "A" CORD LENGTH |
|---|---|---|---|---|
| GFPST1301 | 30A 120V | 3600 | MANUAL | 2 FT. |
| GFPST1305 | 30A 120V | 3600 | MANUAL | 6 FT. |
| GFPST1302 | 30A 120V | 3600 | MANUAL | 25 FT. |
| GFPST1303 | 30A 120V | 3600 | MANUAL | 50 FT. |
| GFPST1311 | 30A 120V | 3600 | AUTO | 2 FT. |
| GFPST1315 | 30A 120V | 3600 | AUTO | 6 FT. |
| GFPST1312 | 30A 120V | 3600 | AUTO | 25 FT. |
| GFPST1313 | 30A 120V | 3600 | AUTO | 50 FT. |
| GFPST2301 | 30A 240V | 7200 | MANUAL | 2 FT. |
| GFPST2302 | 30A 240V | 7200 | MANUAL | 25 FT. |
| GFPST2303 | 30A 240V | 7200 | MANUAL | 50 FT. |
| GFPST2311 | 30A 240V | 7200 | AUTO | 2 FT. |
| GFPST2315 | 30A 240V | 7200 | AUTO | 6 FT. |
| GFPST2312 | 30A 240V | 7200 | AUTO | 25 FT. |

LIST OF PARTS

| DESCRIPTION | MATERIAL | FINISH |
|---|---|---|
| | | |

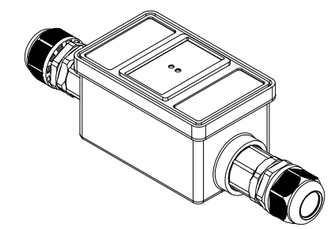

| REV | DESCRIPTION | APP | DATE |
|---|---|---|---|
| 1 | 12/05/22 NEW RELEASE PER DCN#221205026075. D.LI | | 12/05/22 |

THE DESIGN AND DIMENSIONS OF THE PRODUCT SHOWN ON THIS DRAWING ARE SUBJECT TO CHANGE WITHOUT NOTICE. DIMENSIONS ARE IN INCHES [mm].

TITLE

PORTABLE GFCI CIRCUIT GUARD SERIES WITH CORD

WIRING DEVICE-KELLEMS
HUBBELL INCORPORATED
SHELTON, CT

TOLERANCES UNLESS OTHERWISE SPECIFIED
.XX = ± .01
.XXX= ± .005
ANGLE TOL. ±2°

DR. BY D.LI
CHK. BY
SCALE NONE
DATE 9/30/22

DIMENSION SHEET FOR CAT. NO.
SEE TABLE

B

M-14317

1