M-12339 3

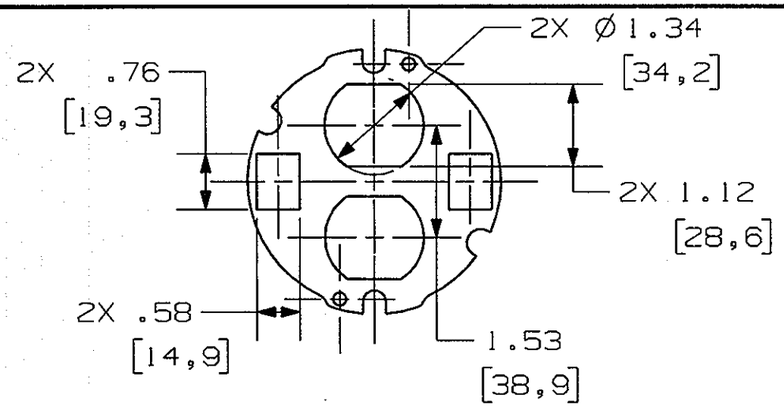


CATALOG NUMBER SIR4SP2X2DUPLEX

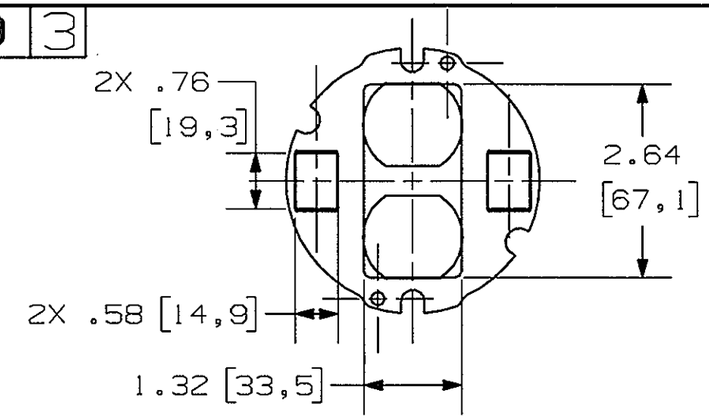


CATALOG NUMBER SIR4SP2X2STYLE

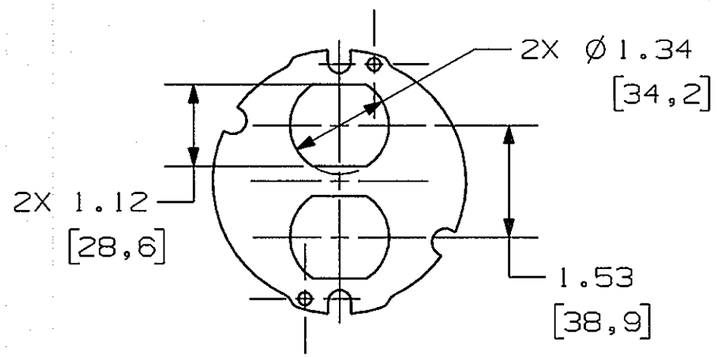


CATALOG NUMBER SIR4SPDUPLEX

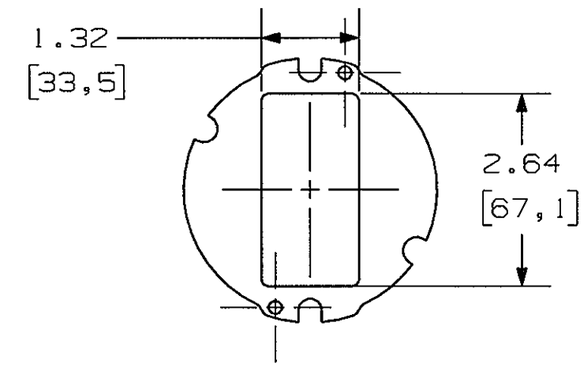


CATALOG NUMBER SIR4SPSTYLE

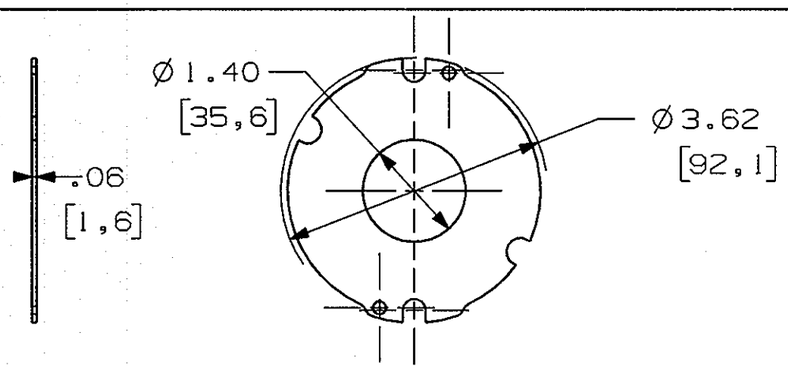


CATALOG NUMBER SIR4SPSIMPLEX

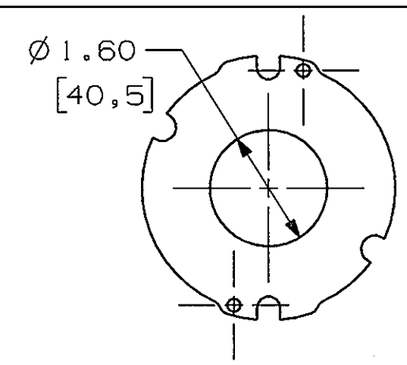


CATALOG NUMBER SIR4SPTWIST

NOTES:
1) ALL DIMENSIONS ARE IN INCHES AND [MILLIMETERS].
2) ALL PLATES HAVE THE SAME OVERALL OUTSIDE DIMENSIONS AND THICKNESS. SEE SIR4SPSIMPLEX.
3) ALL PLATES SHIPPED WITH (2) MOUNTING SCREWS, NOT SHOWN.

SHEET 1 OF 2

CODE 74545

LIST OF PARTS

| DESCRIPTION | MATERIAL | FINISH |
|---|---|---|
| COVER PLATE | STEEL | WHITE |
| MOUNTING SCREWS | STEEL | WHITE |

| SYM | REVISIONS | APP | DATE |
|---|---|---|---|
| 3 | ADDED SHEET 1 OF 2 TEXT TO THIS SHEET. DCN22105. | EM | 5/18/16 |
| 2 | ADDED CATALOG NUMBERS SIR4SPDUPLEX AND SIR4SPSTYLE DCN20139 | | 11/14/13 |
| 1 | RELEASED PER DCN19806 | | 4/30/13 |

THE DESIGN AND DIMENSIONS OF THE PRODUCT SHOWN ON THIS DRAWING ARE SUBJECT TO CHANGE WITHOUT NOTICE

TITLE
COVER PLATES,
FIRE RATED POKE THROUGH,
4 INCH DIAMETER

TOLERANCES UNLESS OTHERWISE SPECIFIED
.XX = ±.01
.XXX = ±.005
ANGLES = ±2°

WIRING DEVICE-KELLEMS
HUBBELL INCORPORATED
SHELTON, CT

| | |
|---|---|
| DR. BY SRE | APP. BY |
| TR. BY | SCALE NONE |
| CHK. BY | DATE 9/12/12 |

DIMENSION SHEET FOR CAT. NO.
SEE INDIVIDUAL CAT. NOS.
REPAIRABLE ☐ NON-REPAIRABLE ☒

B

M-12339

3

M-12339 3

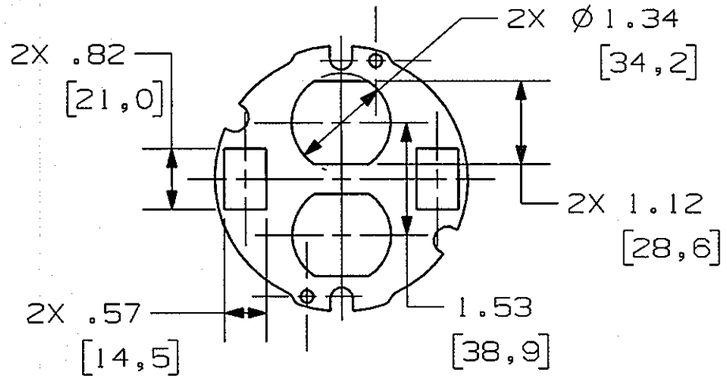


CATALOG NUMBER S1R4SP2X2DUPLEXTJ

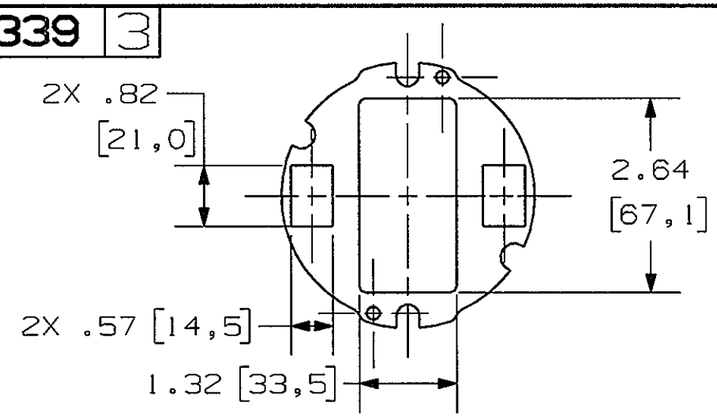


CATALOG NUMBER S1R4SP2X2STYLETJ

LIST OF PARTS

| DESCRIPTION | MATERIAL | FINISH |
|---|---|---|
| COVER PLATE | STEEL | WHITE |
| MOUNTING SCREWS | STEEL | WHITE |

| SYM | REVISIONS | APP | DATE |
|---|---|---|---|
| 3 | ADDED SHEET 2 OF 2, CATALOG NUMBERS S1R4SP2X2DUPLEXTJ AND S1R4SP2X2STYLETJ DCN22105. | EM mz | 5/18/16 |
| 2 | ADDED CATALOG NUMBERS S1R4SPDUPLEX AND S1R4SPSTYLE DCN20139 | | 11/14/13 |
| 1 | RELEASED PER DCN19806 | | 4/30/13 |

THE DESIGN AND DIMENSIONS OF THE PRODUCT SHOWN ON THIS DRAWING ARE SUBJECT TO CHANGE WITHOUT NOTICE

TITLE
COVER PLATES,
FIRE RATED POKE THROUGH,
4 INCH DIAMETER

TOLERANCES UNLESS OTHERWISE SPECIFIED
.XX = ±.01
.XXX = ±.005
ANGLES = ±2°

WIRING DEVICE-KELLEMS
HUBBELL INCORPORATED
SHELTON, CT

| | |
|---|---|
| DR. BY SRE | APP. BY |
| TR. BY | SCALE NONE |
| CHK. BY | DATE 9/12/12 |

DIMENSION SHEET FOR CAT. NO.
SEE INDIVIDUAL CAT. NOS.
REPAIRABLE ☐ NON-REPAIRABLE ☒

B

M-12339

W

SHEET 2 OF 2

CODE 74545