Straight Blade Devices

20 Amp, 125 Volt, 2-Pole, 3-Wire

SNAPConnect® Hospital Grade Receptacle

HUBBELL

Features

- Audible SNAP, indicates solid connection
- Reduces installation time
- Requires minimal box space
- Assembled in USA

Ordering Information

Description	Device Color	UPC Number	Catalog Number
Hospital Grade, Standard Duplex	Black	783585540719	**SNAP8300BKNA**

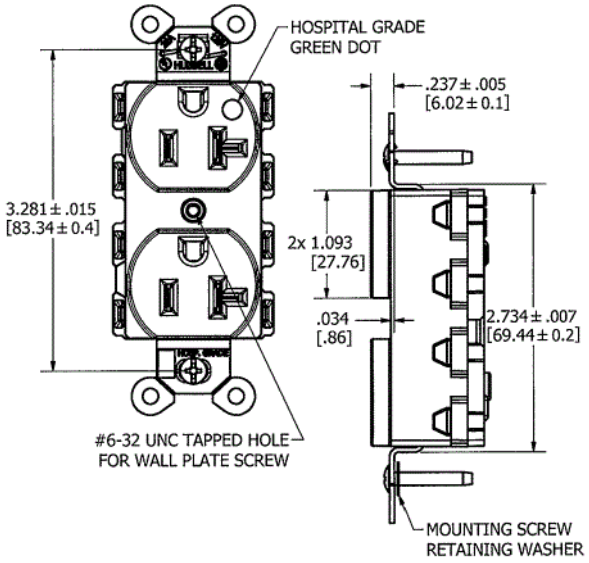

Listings

UL Listed to UL498 File No. E2527
Certified to CSA, C22.2, No. 42 File 626
Fed. Spec. W-C-937
NEMA® WD-6 Compliant

Specifications

Face	Nylon
Base	Nylon
Line Contact	Brass
Ground Contact	Brass

Performance

Electrical

Current Interrupting	Certified for current interrupting at full rated current
Dielectric Voltage	Withstands 2,000V minimum

Mechanical

Product Identification	Ratings are a permanent part of the device

Environmental

Flammability	UL 94V-2
Operating Temperature	Maximum continuous 75°C; minimum -40°C (without impact)

Complementary Products

Wallplate or Weatherproof Cover Opening

Online Resources

Customer Sales Drawing
eCatalog
Installation Instructions

Dimensions in Inches (mm)

Hubbell Wiring Device-Kellems • Hubbell Incorporated (Delaware) • 40 Waterview Drive • Shelton, CT 06484
Phone (800) 288-6000 • Fax (800) 255-1031 • Specifications subject to change without notice.

HUBBELL® Wiring Device-Kellems