ORDER NO.	WOODHEAD NO.	COLOR
130147-0025	26W74	YELLOW
130147-0026	26W74BLK	BLACK

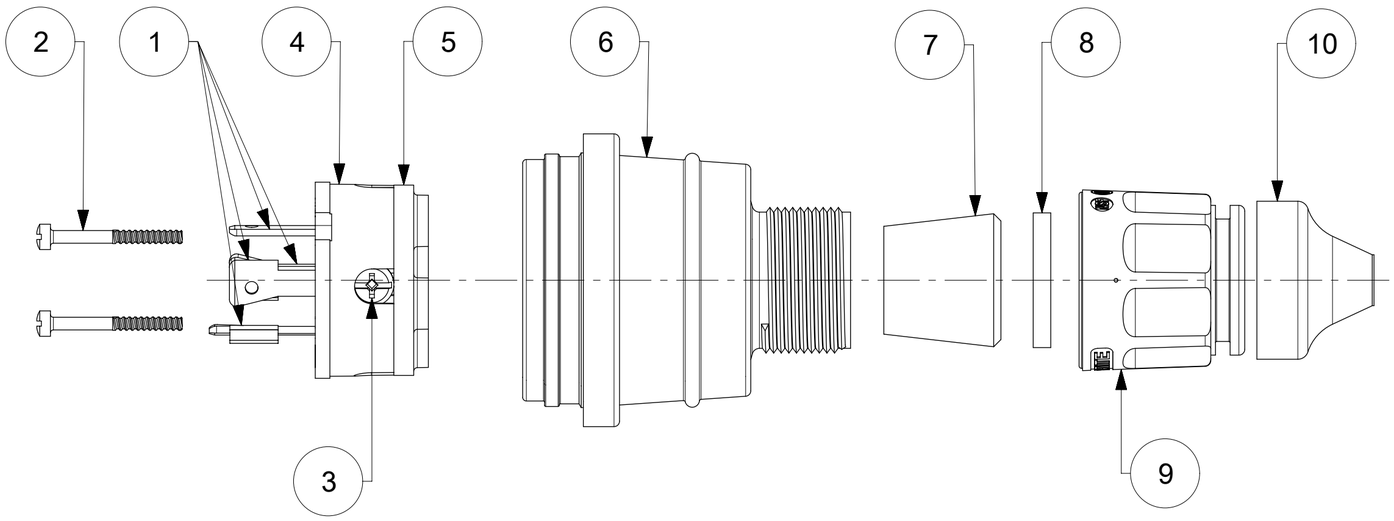

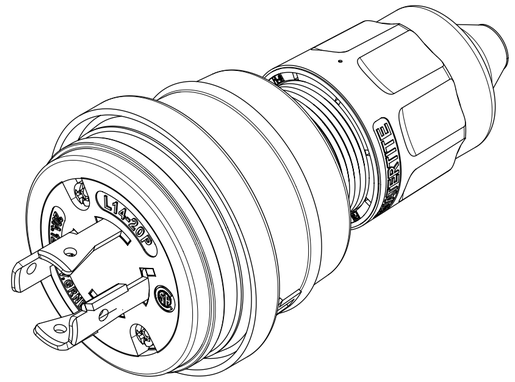

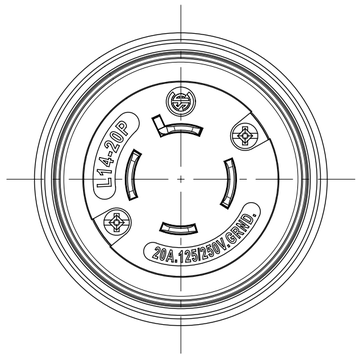

FACE VIEW

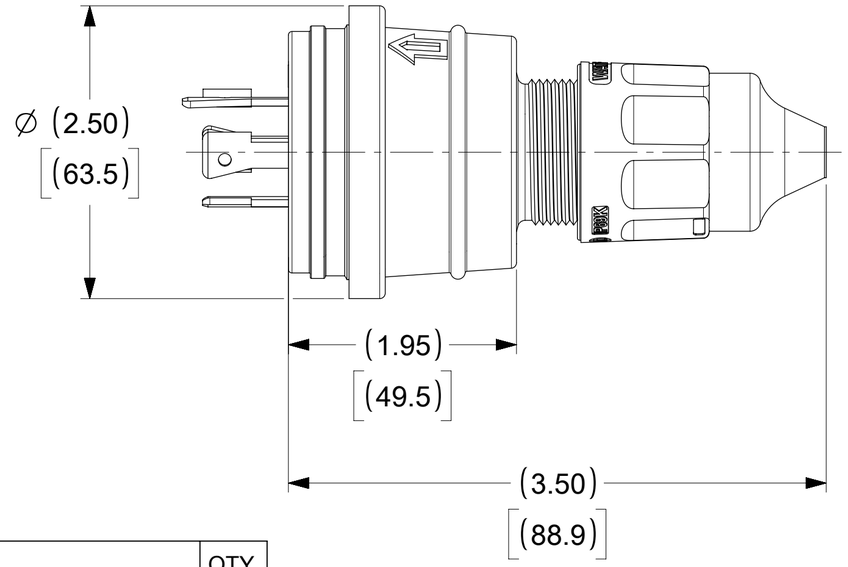

ITEM NO.	DESCRIPTIONS	MATERIAL	QTY.
1	BLADE	BRASS, NICKEL PLATED	4
2	RETAINING SCREWS	STAINLESS STEEL	2
3	CLAMP AND TERMINAL SCREW ASSY	BRASS, ZINC PLATED	4
4	INSERT	NYLON	1
5	TERMINAL COVER	POLYCARBONATE	1
6	HOUSING	SILICON WITH NYLON THREAD	1
7	GROMMET	RUBBER	4
8	FRICTION RING	NYLON	1
9	COMPRESSION NUT	NYLON	1
10	CABLE GLOVE	SILICONE	1

NOTE:
1. ACCEPT CABLE RANGE FROM .437" TO .750"

THIS DRAWING CONTAINS INFORMATION THAT IS PROPRIETARY TO MOLEX ELECTRONIC TECHNOLOGIES, LLC AND SHOULD NOT BE USED WITHOUT WRITTEN PERMISSION

SYMBOLS: F/A = 0; F/C = 0; F/P = 0; S = 0; ▼ = 0; C = 0; ☒ = 0; ■ = 0; G = 0

DIMENSION UNITS: INCH[MM] | SCALE: NTS

GENERAL TOLERANCES (UNLESS SPECIFIED)

	MM	INCH
4 PLACES	±	±
3 PLACES	±	±
2 PLACES	±	±
1 PLACE	±	±
0 PLACES	±	±
ANGULAR TOL	± °	

DRAFT WHERE APPLICABLE MUST REMAIN WITHIN DIMENSIONS

CURRENT REV DESC: RELEASED

EC NO: 616442
DRWN: DSOPPIN 2019/01/09
CHK'D: DNGUYEN62 2019/04/30
APPR: BCAPPS 2019/05/08

INITIAL REVISION:
DRWN: DSOPPIN 2019/01/09
APPR: BCAPPS 2019/05/08

molex

WATERTITE PLUG 3P4W L14-20

PRODUCT CUSTOMER DRAWING

DOCUMENT NUMBER	DOC TYPE	DOC PART	REVISION
1301470025	PSD	000	A

THIRD ANGLE PROJECTION	DRAWING	SERIES	MATERIAL NUMBER	CUSTOMER	SHEET NUMBER
	C-SIZE	130147	SEE TABLE	GENERAL MARKET	1 OF 1

DOCUMENT STATUS	P1	RELEASE DATE	2019/05/08 22:00:00

FORMAT: Eng-tega-master-tb-prod-C
REVISION: D
DATE: 2018/01/18